THIS DRAWING IS UNPUBLISHED. RELEASED FOR PUBLICATION 2018
© COPYRIGHT 2005 BY TE CONNECTIVITY ALL RIGHTS RESERVED.

REVISIONS

P	LTR	DESCRIPTION	DATE	DWN	APVD
	A	REVISED PER PCN E-18-001206	24JAN2018	JA	DM

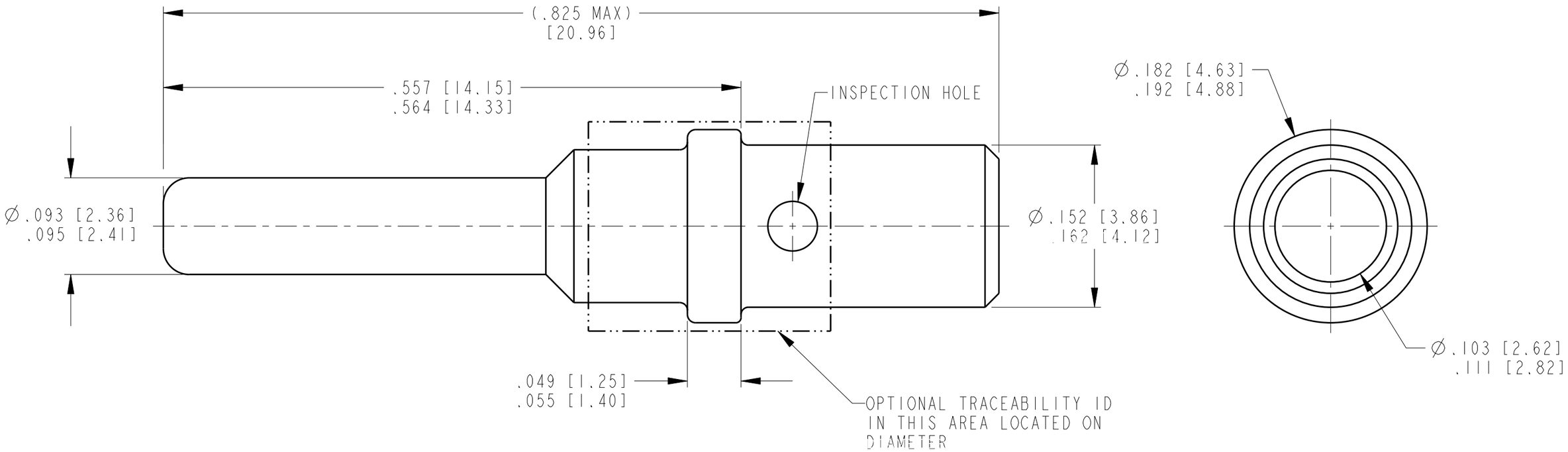

TE INTERNAL PN	DEUTSCH PN	PLATING
0460-204-12141	0460-204-12141	NICKEL

THIS DRAWING IS A CONTROLLED DOCUMENT.

DIMENSIONS: INCHES [mm]

TOLERANCES UNLESS OTHERWISE SPECIFIED:
0 PLC ±
1 PLC ±
2 PLC ±
3 PLC ±
4 PLC ±
ANGLES ±

MATERIAL

FINISH

DWN J.APOSTOL 08MAR2005
CHK B.BYFORD 14MAR2005
APVD R.REED 14MAR2005
PRODUCT SPEC 0425-015-0000
APPLICATION SPEC 0425-205-0000
WEIGHT 1.27g

TE Connectivity

NAME CONTACT PIN SIZE 12

SIZE	CAGE CODE	DRAWING NO	RESTRICTED TO
A3	4AFU8	C-0460-204-12XX	

CUSTOMER DRAWING

SCALE 10:1 SHEET 1 OF 1 REV A

NOTES:

1. WIRE RANGE : 14 AWG TO 12 AWG [2.0 - 3.0 mm²]

1470-19 (3/13)